Outdoor Space/Curtain Tri-tech Detector

User Manual

Overview

The world's first high-performance outdoor detector composed by three groups of high-precision passive infrared detection devices, light sensing circuit and fuzzy logic cores, waterproof design and sleek, can be used indoor and outdoor

Special Feature:

A. Rapid growth of three-dimensional composite sensors to detect, and with fuzzy logic digital ASIC (patent) analysis, to exclude the interference which all kinds of ordinary detectors can not overcome , only alarm to the real human movement, to prevent false alarm and missing alarm effectively, the performance is far beyond the ordinary outdoor detector.

B. Patented hyperbolic precision temperature compensation, regardless of changes in ambient temperature, detection sensitivity, consistent, there is no temperature dead-zone (usually detectors under 32 to 10 degrees, the sensitivity decreased significantly, or in other warm areas vulnerable to false alarm)

C. Holographic anti-false alarm patented technology, anti interference of light, wind, small animals and all kinds of adverse weather conditions

D. For large factories and mines, oil fields, breeding sites, open storage to prevent monitoring, for home security can be achieved for more reasonable alarm function before the intruder broken in

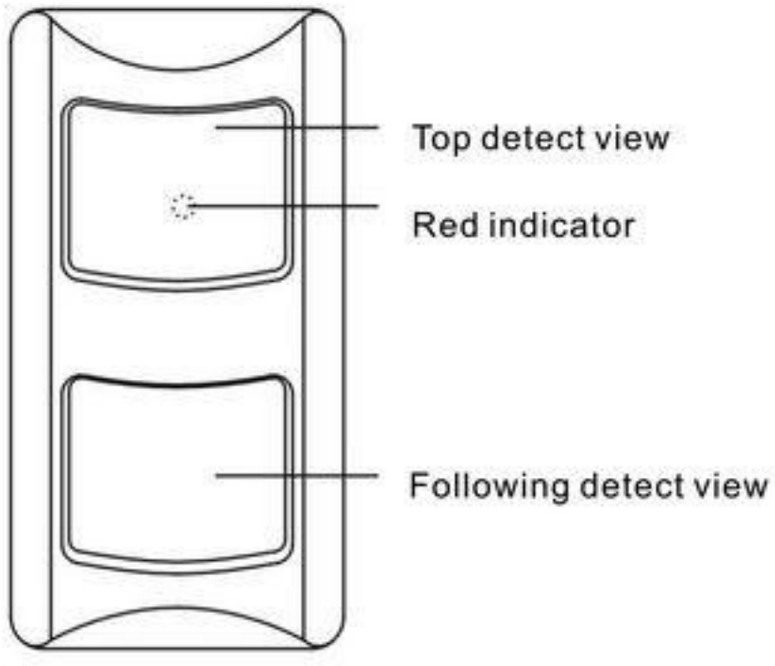

Fig.1 product appearance

Technical Specification.

Voltage: 9~24VDC stabilized power supply
Working Current: Static 45mA (normal relay output) or 10mA (electrical relay output) alarm 15mA
Self testing: 30s warm up
Passive infrared (Pic. 2)
Sensor: Three sets of specially designed low-noise dual structure
Sensor instruction: the red light flash for 3s when detect human's movement.
Sensitivity of sensor: 4 classes selectable
Angle of detector: 110
Angle of dual curtain: 6 ~ 9
Covering range: 12m * 12m
Temperature compensation: automatic hyperbolic temperature compensation

Related parameter of alarm tamper output:
Alarm instruction: Red light flashes for 3s
Alarm port: NO, NC alarm port, contact capacity 100mA/300VDC
Tamper switch: Usual connected, when disconnected, the Open, the contact capacity is 100mA/30VDC
Dimension of product: 138 *75 *46mm

Environment Conditions:
Working temperature: 40℃ to 70℃
Anti EMI: > 30V/M
Anti white light interference: >1,000,000 LUX

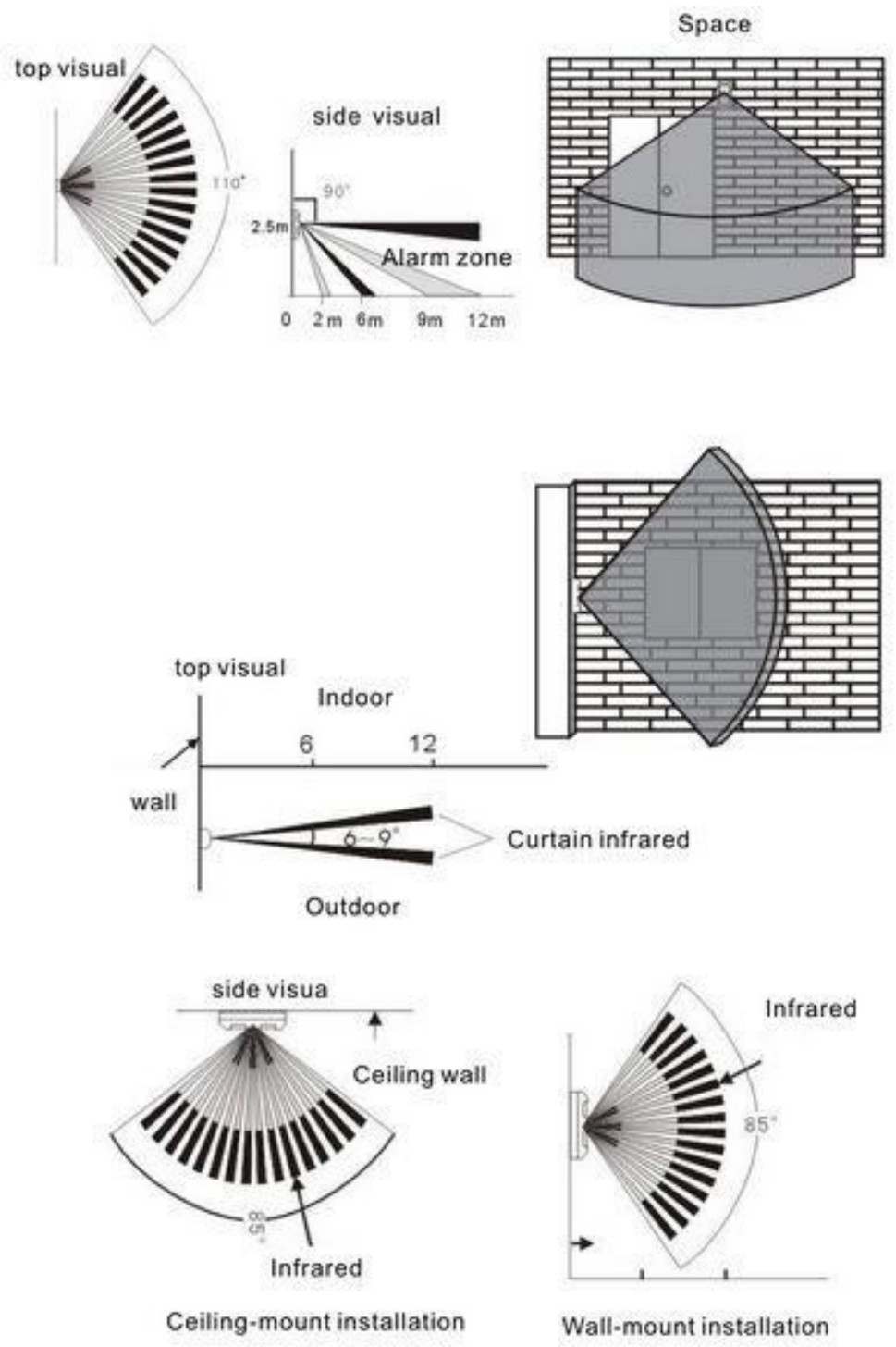

Fig.2 detect range diagram

Installation

3.1 General guidance

A. When the movement track of the intruders forms tangent with detecting circle, the detection sensitivity is the highest, coverage of the boundaries of space detectors is determined by the method

B. When the movement track of the intruders is vertical get through the curtain, the detection sensitivity is the highest, curtain detection range is determined by the method.

C. To avoid installing along with strong electric cable

D. When the detector is installed in high-temperature environments, it is necessary to achieve the best results, the proposed alignment protected area of its temperature and brightness in the lowest part.

E. In the strong interference environments should increase the number of counting pulses and reduce the detection sensitivity.

F. Installation of detectors should be strong and stable wall, no swing

3.2 Installation:

There is light at one end facing up, case back flat against the wall, using screws bottom slider to detect from 2.0 to 2.5 meters above the ground, when the detectors need to adjust the angle, and optional SKY-U Type Universal Bracket.

Note: 1. Angle and height changes, will cause changes in the scope probe

2. Connector must be the bottom of the detector leads, qualifying I struggled into the waterproof rubber ring must be pressed.

3.3 Power-through Work

Self testing for 30s, then enter into normal working state.

3.4 Function of indicator:

Red light flashes for 3s, detect intruder, the detector alarm.

3.5 Setting of working state

Setting of infrared sensitivity jumper

Jumper 1 and 2 infrared sensitivity in general is set to the same location (the default setting for 6 to 12 m)



When the jumper connected 9-18M position, sensor sensitivity is 9-18M

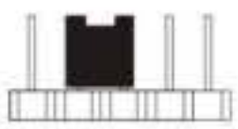

When the jumper connected 6-12M position, sensor sensitivity is 6-12M



When the jumper connected 5-9M position, sensor sensitivity is 5-9M

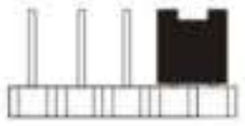

When the jumper connected 3-6M position, sensor sensitivity is 3-6M

Detector Mode adjustment



When the knob points to DAY, it's all-day alarm mode. When the knob points to NORMAL, it's ordinary mode, alarm after dusk.

When the knob pointing NIGHT then it's Night Alarm mode

Infrared pulse count jumper settings (factory set is 2):

Two groups of pulse-counting jumper 1 and 2, in general is set to the same pulse-counting

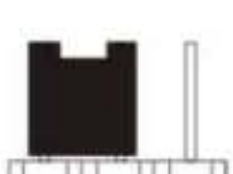

When the jumper connected 1 position, then pulse count is 1

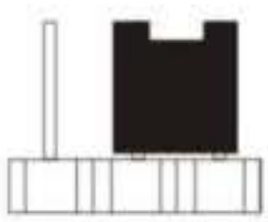

When the jumper connected 2 position, then pulse count is 2

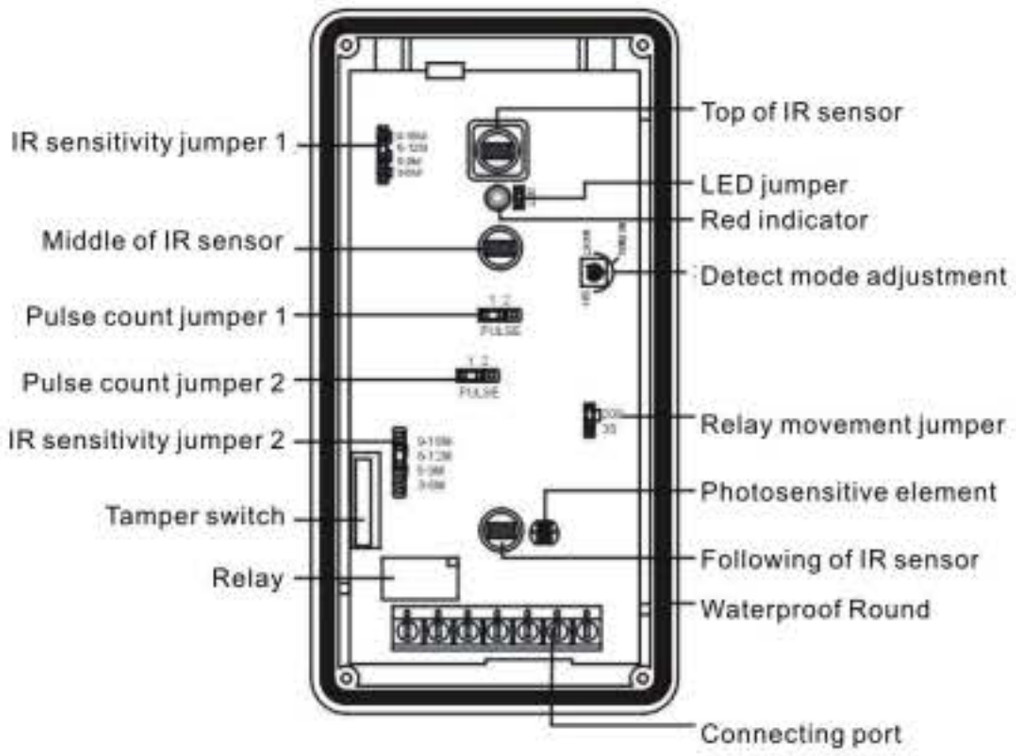

Fig.3 Diagram of the PCB

Relay jumper settings

Time of 20 seconds

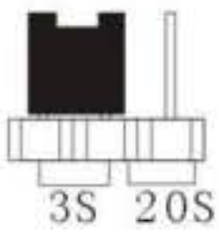

Factory set is 3S. When the jumper is set to 3S, the detector alarm relay hold time is 3 seconds, jumper set to 20S, the detector alarm relay hold

LED Jumper Settings

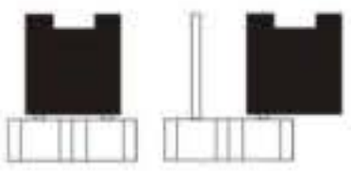

When the LED jumper connected alarm, the red indicator light, LED jumper disconnected, when alarm, the red light does not shine

3.7 Connection terminals

NOTE: EOL termination resistors should be based on the request of the alarm host tandem

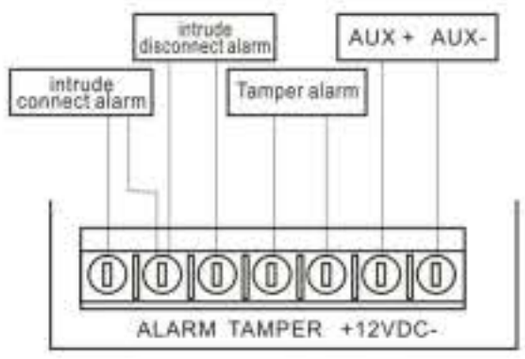

General Electromagnetic Relay Output

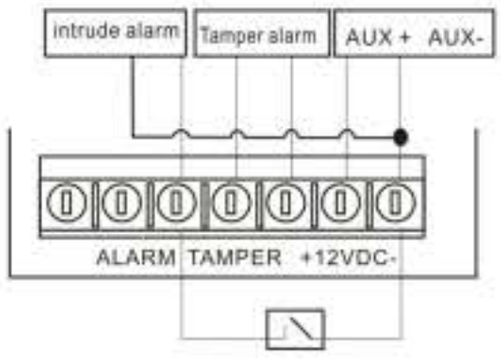

Electronic Solid State Relay Output

3.8 Electronic Solid State Relay Output

When the detector farther away from the host (for example, a few hundred meters), the need to use of electronic relay output to reduce line voltage, the user can customize the products of electronic solid-state relay output (with "e" label)

3.9 Walking Test

A. Set all the states to factory setting

B. Simulate an intruder to move in the range of the covering place of infrared or curtain, whenever movement is detected, the red indicator light 3 seconds.

C. Measured the maximum effective range, if is the required coverage area, or to adjust the position or angle of the detector or change the jumper, so that the coverage area not exceed the desired protected area

4. Notes

A. Do not drop or impact during installation of the detector, so as not to damage the internal sensors and relays.

B. In the place with strong interfering place, the infrared pulse counting numbers should be increased.

C. Do not touch-sensitive infrared sensor so as not to dirty mirror.

D. Testing completed, all of the settings should be restored to normal working hours to set as the desired state.

E. The detectors should be regularly having walking test.