User's Guide

for Twin10G™ Thunderbolt™ 3 Edition
Dual-Port 10GBASE-T 10 Gigabit Ethernet
Thunderbolt 3 Adapter

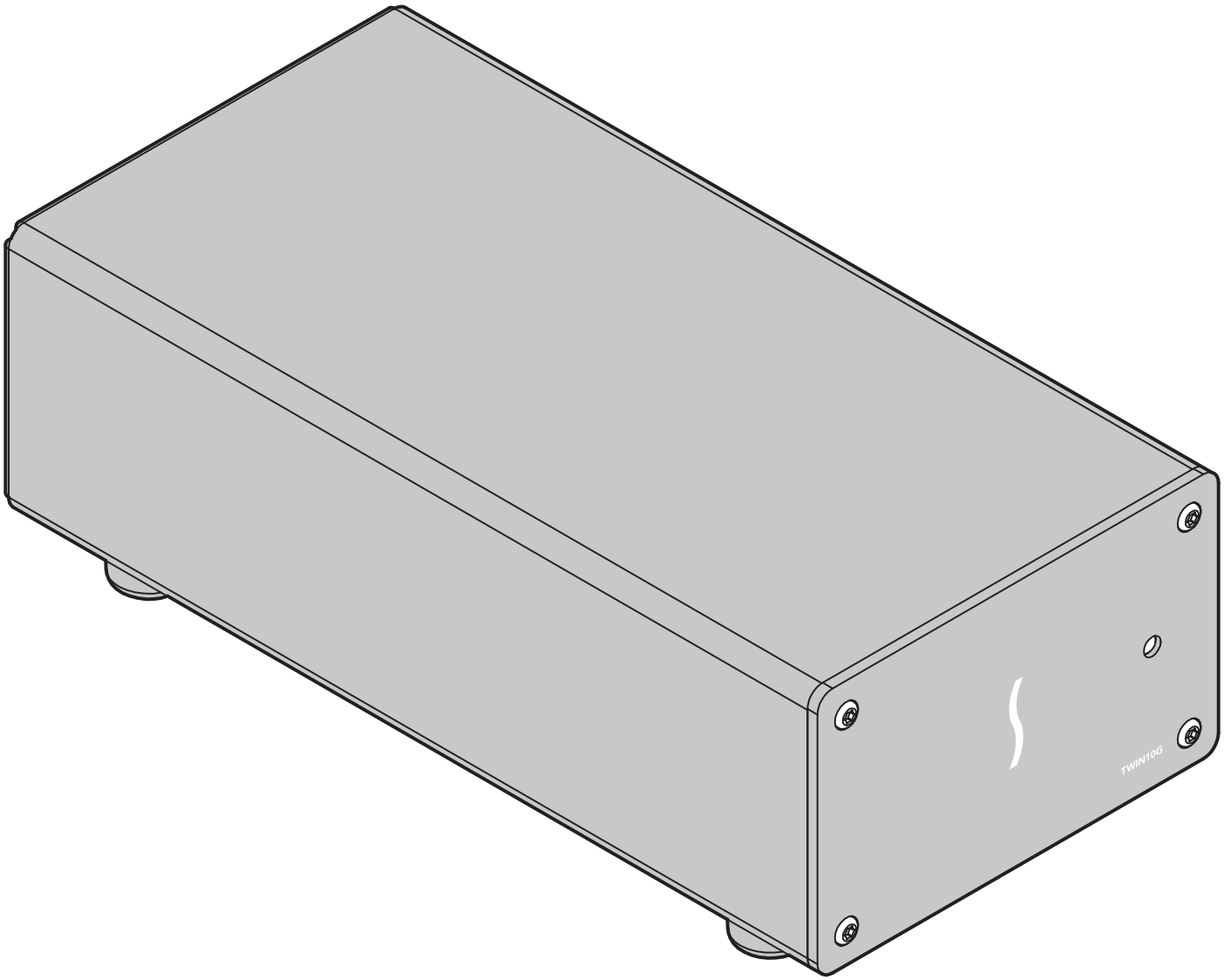

THUNDERBOLT™

Mac

For Windows

SONNET™

Contents

1 Chapter 1 – Introduction, System Requirements, and System Preparation 1
Introduction
Mac Compatibility
Windows Compatibility
Linux Compatibility
System Requirements
Driver Information
Preparing to Use the Adapter With a Mac Computer
Preparing to Use the Adapter With a Windows Computer
Preparing to Use the Adapter With a Linux Computer

2 Twin10G Thunderbolt 3 Edition (T3E) Description 3
Twin10G T3E Indicators, Sockets, and Ports
Power Adapter
Thunderbolt 3 (40Gbps) Cable
Thunderbolt Connector Retainer Clip

3 Driver Download/Installation Steps 5
Driver Download and Installation Steps—Mac Users
Driver Download and Installation Steps—Windows Users

4 Twin10G T3E Adapter Connection Steps 6

5 Verification and Configuration Steps 7
Confirm the Twin10G T3E and Its Ethernet Controllers are Recognized—Mac Users
Confirm the Twin10G T3E and Its Ethernet Controllers are Recognized—Windows Users
Basic Configuration Steps—Mac Users
Performance Tuning Steps—Mac Users
Basic Configuration Steps—Windows Users

6 Tips, General Information, and Known Issues 11
Tips, General Information
Known Issues

7 Warnings, FCC Compliance, and Support Information 12
Warnings
FCC Compliance
Contacting Customer Service
Visit Our Website

Chapter 1 – Introduction, System Requirements, and System Preparation

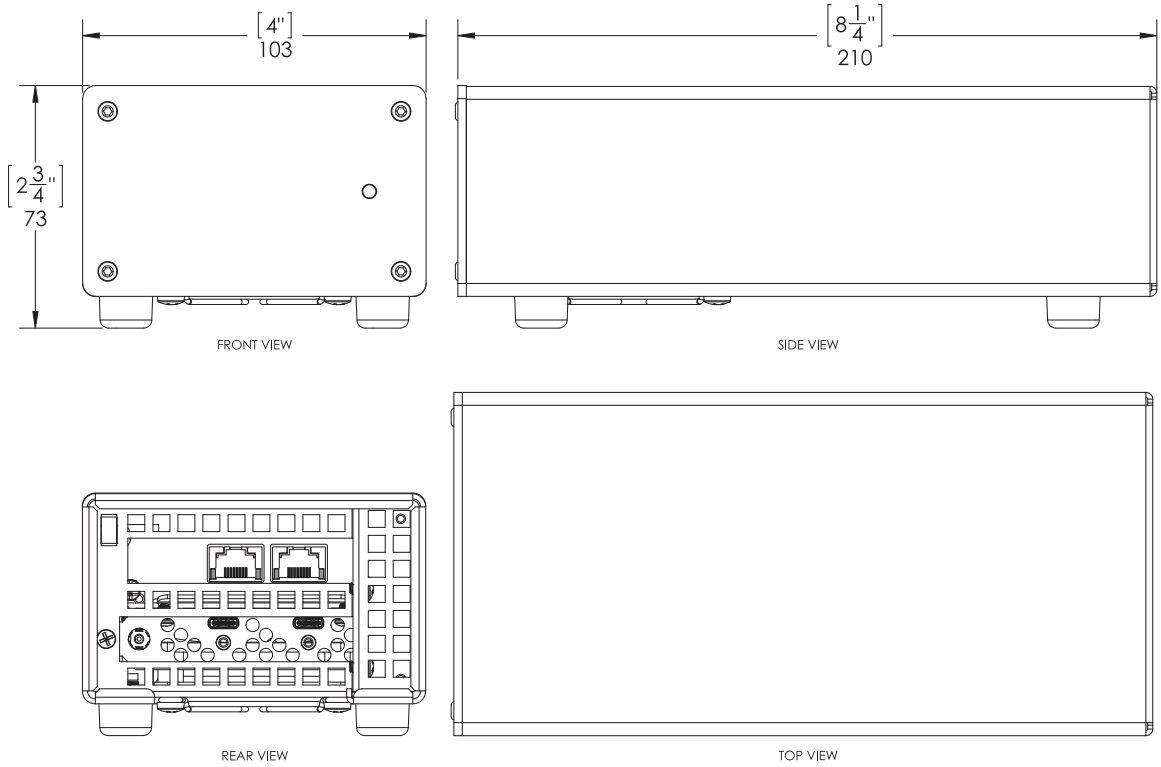

Introduction

Congratulations on your purchase! The Twin10G Thunderbolt 3 Edition (T3E) is a Thunderbolt 3 to 10 Gigabit Ethernet (10GbE) adapter that enables you to connect your computer with a Thunderbolt 3 port to 10GbE infrastructure.

Support Note: This document was up to date at the time of printing. However, changes to the hardware or software may have occurred since then. Please check the Sonnet website for the latest documentation.

1. Go to www.sonnettech.com/support/kb/kb.php
2. Click the Thunderbolt Product link.
3. Click the Twin10G Thunderbolt 3 Edition link, and then click the Manual link.
4. Click the Twin10G Thunderbolt 3 Edition User's Guide [English] link, and then check the Document Version information. If the version listed is later than this document (**revision I**), click the Download Now button for the latest version.

Mac® Compatibility

- Mac with Thunderbolt 3 ports
- Mac with Thunderbolt 2 or Thunderbolt ports when used with an Apple Thunderbolt 3 (USB-C) to Thunderbolt 2 Adapter plus Thunderbolt 2 cable (both sold separately)
- macOS® 10.12.6+ (Sonnet recommends macOS 10.13.6+ when connecting via SMB protocol)
- macOS Mojave compatible

Windows® Compatibility

- Computer with a Thunderbolt 3 port
- Windows 10 (64-bit Edition Version 1809 or greater)

Linux® Compatibility

- PC with a Thunderbolt 2 port
- Linux Kernel 5.0 and later

System Requirements

The Twin10G T3E adapter requires the following to operate:

- Thunderbolt 3 (40Gbps) cable (included)
- One or two CAT 6 or CAT 6A cables

Support Note: For link aggregation (teaming) support, the switch or router to which the Twin10G is connected must also support link aggregation, and ports must be configured for link aggregation. Windows 10 teaming requires version 1809 or greater.

Driver Information—Mac and Windows

The drivers that enable the Twin10G T3E adapter to work with Mac and Windows computers must be downloaded from Sonnet's Website; instructions follow.

Driver and Configuration Information—Linux

The drivers that enable the Twin10G T3E adapter to work with Linux are installed as part of the Linux Kernel 5.0 and later.

The steps necessary to configure the Sonnet adapter with your computer may vary based on the version of Linux running. Sonnet recommends using whatever method or tools you would normally use for configuring any onboard ports.

Chapter 1 – Introduction, System Requirements, and System Preparation

Preparing to Use the Adapter With a Mac Computer

To enable the Twin10G T3E to work with your system, you will do the following:

1. Update your computer to the latest version of macOS; version 10.12.6 or later is required.
2. Download and install the Twin10G T3E drivers (instructions follow).
3. Connect the Twin10G T3E adapter to a switch or storage system (instructions follow).
4. Connect the Twin10G T3E adapter to your computer, and then power on the computer (instructions follow).
5. Confirm the Twin10G T3E adapter and its Ethernet controllers are recognized by your computer (instructions follow).
6. Configure the adapter through the System Preferences' Network control panel (instructions follow).

Preparing to Use the Adapter With a Windows Computer

To enable the Twin10G T3E to work with your system, you will do the following:

1. Update Windows. You must use Windows 10 (64-bit Edition Version 1809 or greater). To check the version number, type *winver* in the search bar and click enter.
2. Update your computer's BIOS to the latest version. If you need help updating your BIOS, contact your computer manufacturer.
3. Update your Thunderbolt Bus Driver to the latest version; you will need version 16.3.61.275 or newer. To check your driver version, go to Settings:Apps:Thunderbolt(TM) Software and you will see the version number. If it is not 16.3.61.275 or newer, then you need to update it. Check with your computer manufacturer for an update.
4. Download and install the Twin10G T3E drivers (instructions follow).
5. Connect the Twin10G T3E adapter to a switch or storage system (instructions follow).
6. Connect the Twin10G T3E adapter to your computer, and then approve the device (always connect); instructions follow.
7. Confirm the Twin10G T3E adapter and its Ethernet controllers are recognized by your computer (instructions follow).
8. Configure the adapter through the Network and Sharing Center control panel (instructions follow).

Preparing to Use the Adapter With a Linux Computer

To enable the Twin10G T3E to work with your system, you will do the following:

1. If necessary, download and install the Linux Kernel 5.0 or later.
2. Connect the Twin10G T3E adapter to a switch or storage system.
3. Connect the Twin10G T3E adapter to your computer, and then power on the computer.
4. Configure the adapter using the methods or tools you would normally use for configuring onboard ports.

Chapter 2 – Twin10G Thunderbolt 3 Edition (T3E) Description

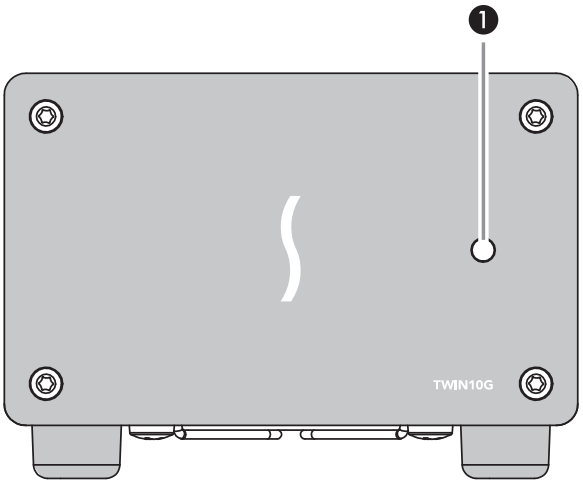

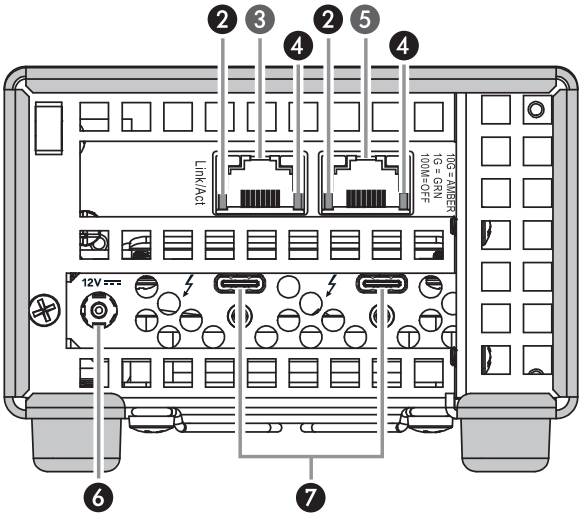

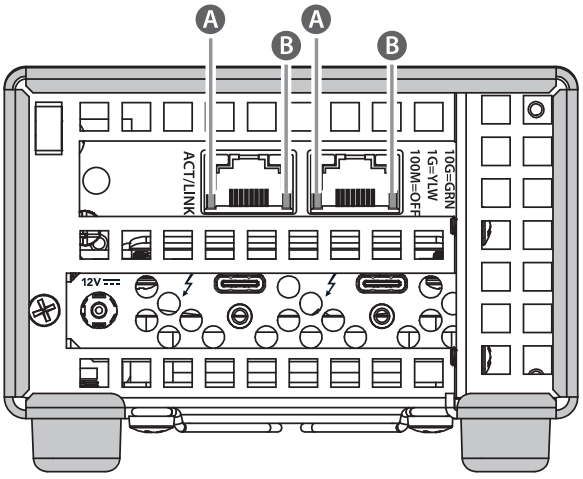

Support Note: Sonnet has sold two versions of the Twin10G T3E adapter. The first version was manufactured through approximately late October 2018, with the second edition manufactured November 2018 and after. The ports are the same on both versions; only the activity and link indicators differ as designated.

Twin10G T3E Indicators, Sockets, and Ports

1 – Power Indicator

This lights when the Twin10G T3E adapter is powered, the Thunderbolt cable between the adapter and your computer is plugged in securely, and the computer powered on. Note that if the Twin10G T3E is connected to another Thunderbolt peripheral device instead of directly to the computer, any other Thunderbolt device connected between the computer and adapter must also be powered on before the adapter's power indicator will light up.

2 – Activity Indicators (Adapter Version 1)

These LEDs flash green to indicate a link is established between the Twin10G T3E adapter and the switch, and there is activity between the two.

3 – RJ45 (10GBASE-T) Port 2

Connect a CAT 6 or CAT 6A cable between this port and the switch's or storage device's RJ45 port.

4 – Link Speed Indicators (Adapter Version 1)

When a link is established between the Twin10G T3E adapter and the switch, these LEDs light to indicate the link speed to the switch: yellow = 10Gb, green = 1Gb, off = 100Mb.

5 – RJ45 (10GBASE-T) Port 1

Connect a CAT 6 or CAT 6A cable between this port and the switch's or storage device's RJ45 port.

6 – 12VDC Socket

Connect the included DC power adapter between this socket and the included power cord.

7 – Thunderbolt 3 Ports

Connect the included Thunderbolt cable between either of these ports and your computer's (or intermediate peripheral device's) Thunderbolt port; the open port may be used to connect another Thunderbolt peripheral device. *You may not connect two computers to this adapter's Thunderbolt ports, nor to a daisy chain of Thunderbolt peripheral devices.*

A – Activity/Link Indicators (Adapter Version 2)

These LEDs light up green to indicate a link is established between the Twin10G T3E adapter and the switch, and flash green when there is activity between the two.

B – Link Speed Indicators (Adapter Version 2)

When a link is established between the Twin10G T3E adapter and the switch, these LEDs light to indicate the link speed to the switch: green = 10Gb, yellow = 1Gb, off = 100Mb.

Chapter 2 – Twin10G Thunderbolt 3 Edition (T3E) Description

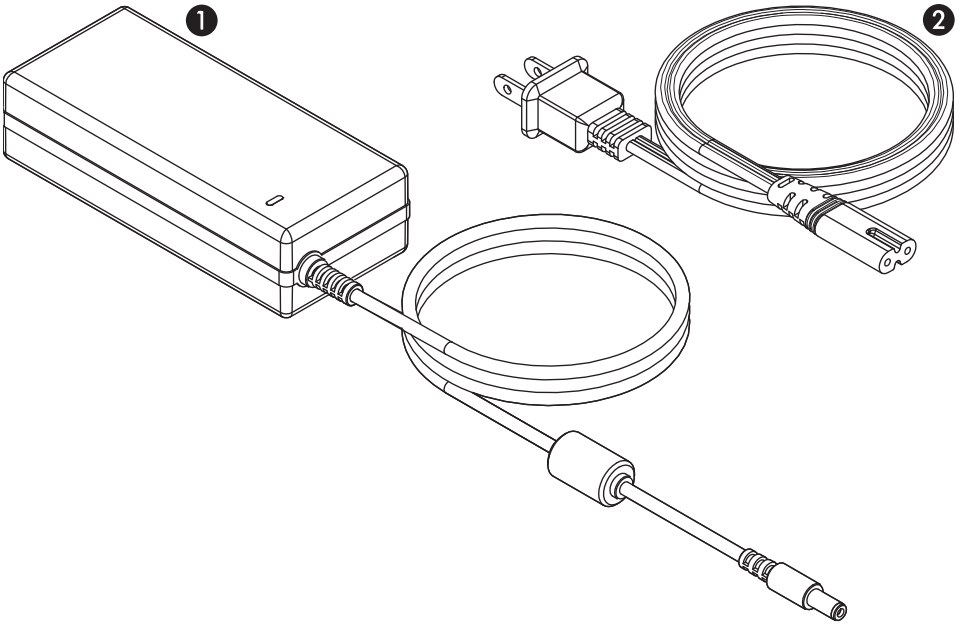

Power Adapter

1 – Power Adapter

Connect this to the Twin10G T3E adapter's 12VDC socket. Note that the power indicator on top lights when the adapter is connected to AC power.

2 – Power Cord

Connect this between a power outlet and the power adapter. Note that the power cord included with your product may appear different than the one pictured here, depending on where the product was purchased.

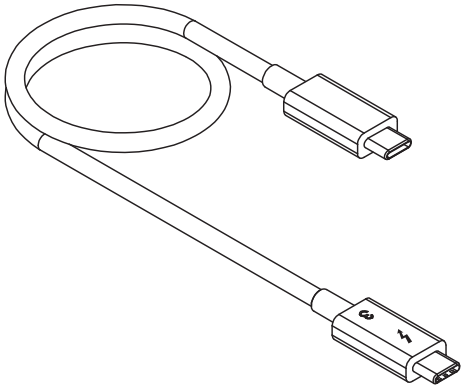

Thunderbolt 3 (40Gbps) Cable

Connect this cable between the Twin10G T3E adapter and your computer (or other Thunderbolt peripheral device in the chain connected to the computer). Connecting the Twin10G adapter to a computer port marked with the USB icon (⭠) is NOT supported.

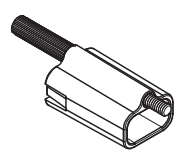

Thunderbolt Connector Retainer Clip

This secures a Thunderbolt 3 connector plugged into the Twin10G T3E adapter's Thunderbolt 3 port to prevent accidental cable disconnection. This clip is compatible with Sonnet 0.5-meter Thunderbolt 3 cables, but not with Sonnet 1-meter Thunderbolt 3 cables.

Chapter 3 – Driver Download/Installation Steps

Driver Download and Installation Steps—Mac Users

This section describes the download and installation of the drivers required to support the Twin10G T3E adapter connected to your Mac computer.

1. For users running macOS 10.13 (High Sierra) or later, open System Preferences, and then click Security and Privacy. Otherwise, skip to step 3.

2. In the Security and Privacy panel click the General tab. Under "Allow apps downloaded from" select "App Store and identified developers".

3. Launch a Web browser and go to www.sonnettech.com/support, and then click the Downloads, Manuals, & Knowledgebase link.

4. On the Support Categories page, click the Thunderbolt link, and then click the Twin10G Thunderbolt 3 Edition link.

5. On the Twin10G Thunderbolt 3 Edition page, click the Driver link, and then click the Download Now button next to driver software for macOS; the software will be downloaded.

6. Double-click the .dmg you downloaded; the file will expand and a new window will open.

7. Double-click the Sonnet Twin-10G.pkg file to launch the driver installer. Follow the on-screen instructions to install the software.

8. When the window appears indicating the software installation is complete, click Restart to restart your system and finish the driver installation.

9. For users running macOS 10.13 (High Sierra) or later, if the driver doesn't load after a restart, you may need to go back into System Preferences, manually authorize the Sonnet driver, and then restart your system again.

Driver Download and Installation Steps—Windows Users

This section describes the download and installation of the drivers required to support the Twin10G T3E adapter connected to your Windows PC.

1. Launch a Web browser and go to www.sonnettech.com/support, and then click the Downloads, Manuals, & Knowledgebase link.

2. On the Support Categories page, click the Thunderbolt link, and then click the Twin10G Thunderbolt 3 Edition link.

3. On the Twin10G Thunderbolt 3 Edition page, click the Driver link, and then click the Download Now button next to the driver software for Windows link; a new window or tab will open.

4. Locate the Intel® Network Adapter Driver for Windows® 10 link, and then click it; a new page opens.

5. On the *Intel® Network Adapter Driver for Windows® 10* page, locate and click the PROWin64.exe button; an *Intel Software License Agreement* window will open.

6. Read the license agreement, and then click the "I accept the terms in this license agreement" button; the *Opening PROWin64.exe* window will open.

7. In the *Opening PROWin64.exe* window, click Save File; the file will be saved.

8. Locate and double-click the PROWin64 application file to launch the installer. If you haven't disabled User Access Control (UAC) on your computer, another window will appear asking you to allow the program to run; click Allow; the installer will launch.

9. Follow the on-screen instructions to complete the driver installation.

Chapter 4 – Twin10G T3E Adapter Connection Steps

Support Note: Sonnet's ThunderLok™ 3 Thunderbolt connector retainer clip secures the included Thunderbolt 3 (40Gbps) cable to the Twin10G adapter to prevent accidental disconnects. It is compatible with Sonnet 0.7- and 0.5-meter Thunderbolt 3 (40Gbps) cables, but not compatible with Sonnet 2-meter Thunderbolt 3 (40Gbps) cables.

To attach the clip to the cable, remove both from their packaging, and then insert the connector through the connector clip as shown **(Figure 1)**. Note that the connector will pass all the way through the clip; when you connect the cable to the chassis, the clip will secure the connector.

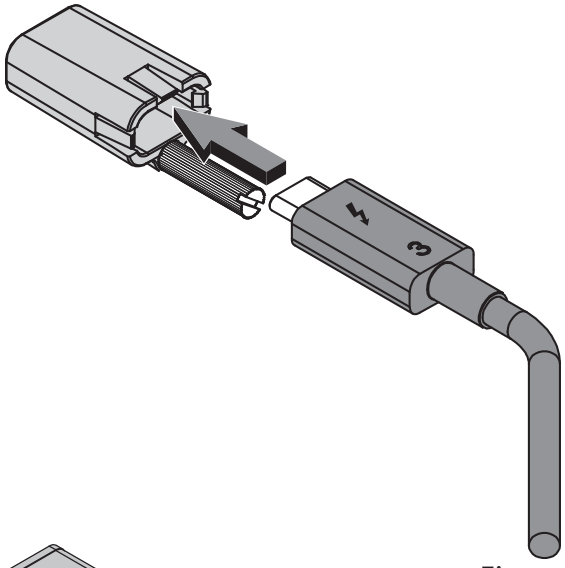

Figure 1

1. Connect the included Thunderbolt cable (or a comparable Thunderbolt 3 [40Gbps] cable) between a Thunderbolt 3 port on the Twin10G T3E adapter and a Thunderbolt 3 port on your computer, or other Thunderbolt device in the chain connected to the computer **(Figure 2)**. Note that cables or ports marked with the USB icon (•<) are NOT compatible. Secure the retainer clip to the chassis if you attached it. If you are daisy chaining additional Thunderbolt devices, connect another Thunderbolt cable between the downstream device and the open Thunderbolt port on the Sonnet adapter. Also Note that **you may not connect two computers to the Sonnet adapter's Thunderbolt ports, nor to a daisy chain of Thunderbolt devices.**

Support Note: Unless your setup requires connection redundancy or link aggregation (and your switch or storage system supports those features), connecting the Twin10G adapter to a switch or storage system requires only a single CAT 6 or CAT 6A cable.

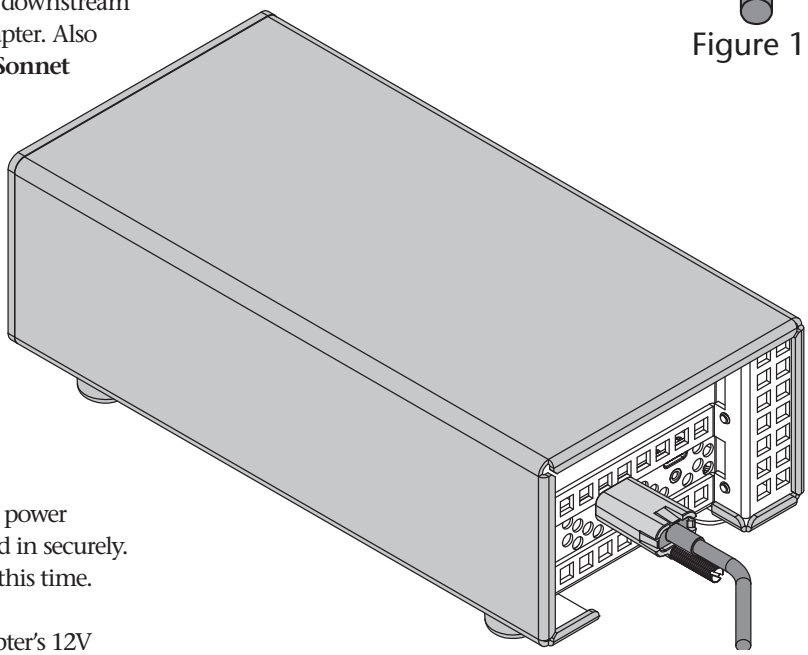

Figure 2

2. Connect one or two CAT 6 or CAT 6A cable(s) between the port(s) on the Twin10G T3E adapter and the port(s) on the switch or storage device.

3. Connect the included power cord between a wall outlet or power strip and the power adapter; verify the connector is plugged in securely. Note that the power adapter's power indicator will light at this time.

4. Connect the power adapter cable to the Twin10G T3E adapter's 12V power socket. Note that the Sonnet adapter's power indicator will not light until the computer, and any other Thunderbolt devices connected between it and the adapter, is powered on.

5. Go to the next section, Verification and Configuration Steps.

Chapter 5 – Verification and Configuration Steps

Confirm the Twin10G T3E and Its Ethernet Controllers Are Recognized—Mac Users

This page instructs Mac users how to verify the Twin10G T3E is recognized by the computer; Windows users should skip to the next page.

1. With the Twin10G T3E adapter powered and connected to the computer, turn on the computer.

2. From the Apple menu, select About This Mac; the *About This Mac* window will open.

3. In the *About This Mac* window click System Report; a full report window will open.

4. In the *System Information* window, click Thunderbolt under the Hardware header in the left column **(Figure 3)**.

5. In the top right column under the Thunderbolt Device Tree header, you will see the computer, followed by Thunderbolt Bus, and then "Echo Express SEL TB3" **(Figure 3)**.

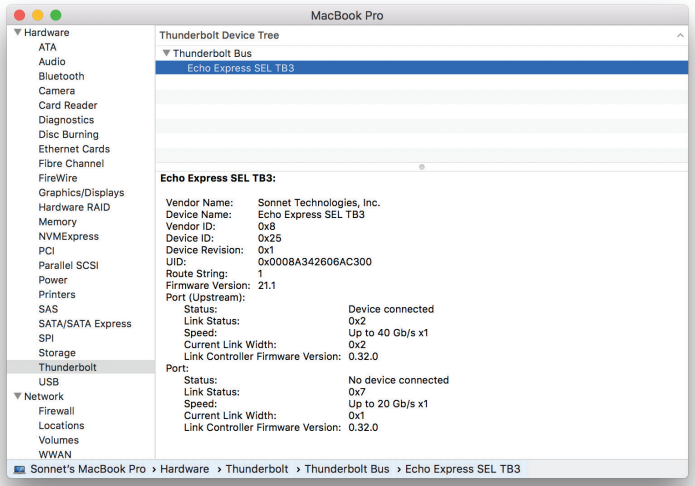

Figure 3

Support Note: If you do not see "Echo Express SEL TB3" listed, disconnect and reconnect the Thunderbolt cable between the computer and Twin10G adapter. Note that it is not necessary to shut down the computer before disconnecting and reconnecting the cable.

6. In the *System Information* window click PCI under the Hardware header in the left column **(Figure 4)**.

7. At the top of the right column, the installed card is listed. You should see "Yes" next to Driver Installed and Tunnel Compatible, otherwise the card or driver may not be Thunderbolt-compatible **(Figure 4)**.

8. Skip to the next section, Basic Configuration Steps—Mac Users.

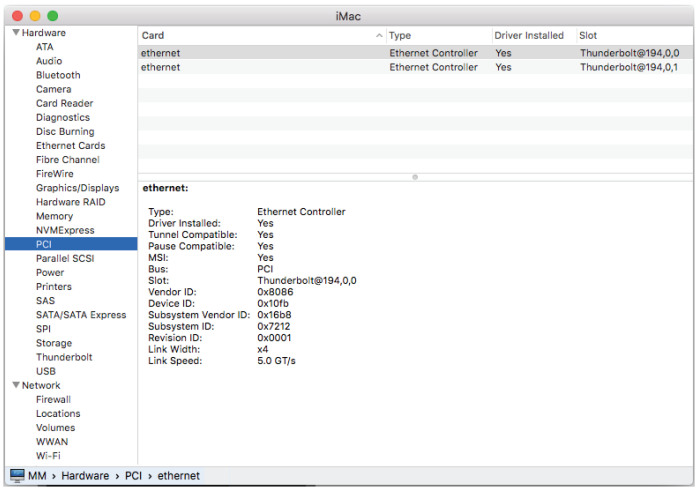

Figure 4

Chapter 5 – Verification and Configuration Steps

Confirm the Twin10G T3E and Its Ethernet Controllers Are Recognized—Windows Users

This section describes how to confirm the Twin10G T3E adapter is recognized by your Windows computer.

1. With the Twin10G T3E adapter connected to a power source and to the computer, turn on the computer.

2. When the computer boots for the first time after connecting the Twin10G T3E, a *New Thunderbolt™ Devices Attached…* window appears **(Figure 5)**. Select Always Connect from the drop-down menu.

3. From the Windows Start menu, select the Windows Settings (gear) icon; the *Windows Settings* window will appear.

4. In the *Windows Settings* window, click on the Network & Internet Link; the *Network Status* window will appear. Click the Ethernet link on the left; the *Ethernet* window will appear.

5. In the *Ethernet* window, the various Ethernet ports recognized by the system are listed to the right. For most users, the Twin10G T3E adapter's will be the only other Ethernet ports listed, with the computer's onboard Ethernet port listed as "Network". Click on one of the other ports; an Ethernet port *Properties* window will appear. Each of the Sonnet adapter's ports will have the description "Intel Ethernet Controller X550" with either #1 or #2 listed next to it.

6. Skip to the next section, Basic Configuration Steps—Windows Users.



Figure 5

Chapter 5 – Verification and Configuration Steps

Basic Configuration Steps—Mac Users

Listed below are the basic steps necessary to configure the Twin10G T3E adapter for use with your computer.

1. With the Twin10G T3E adapter connected to your computer and 10GbE infrastructure, open System Preferences, and then click Network.

2. In the Network system preferences panel, click one of the Twin10G T3E's ports (identified as Thunderbolt Ethernet Slot x, Port 1 and Thunderbolt Ethernet Slot x, Port 2) in the left panel, and then configure the settings; repeat for the other port if necessary **(Figure 6)**.

3. When you've completed reviewing or changing the settings, click Apply.

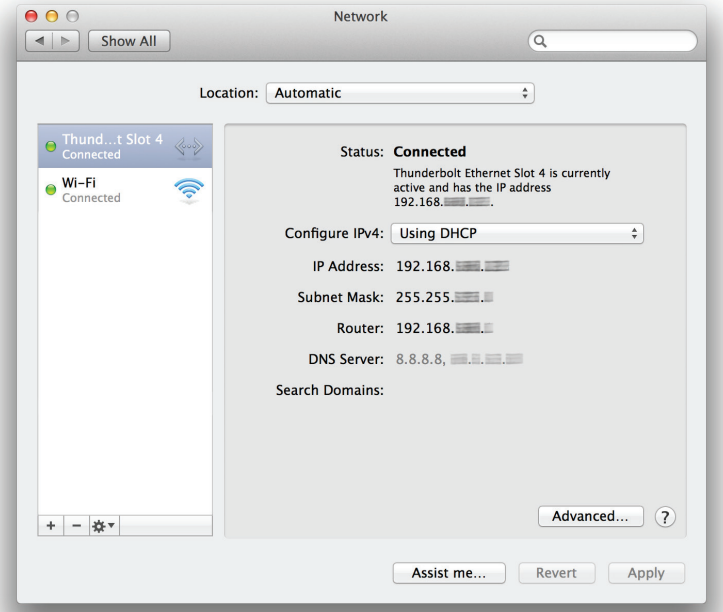

Figure 6

Performance Tuning Steps—Mac Users

Listed below are steps required to configure the Twin10G adapter for maximum performance.

Support Note: In order to realize any performance increases, the network switches and server to which the Sonnet adapter is connected must all be configured to have jumbo frames enabled.

1. With the Twin10G T3E adapter connected to your computer and 10GbE infrastructure, open System Preferences, and then click Network.

2. In the Network System Preferences panel, click one of the Twin10G's ports (identified as Thunderbolt Ethernet Slot x, Port 1 and Thunderbolt Ethernet Slot x, Port 2) in the left panel, and then click Advanced; a new panel appears.

3. In the Advanced panel, click Hardware. From the Configure drop-down menu, select "Manually". In the Speed drop-down menu, leave the setting at 10G… In the Duplex drop-down menu, select "full-duplex" (*not* "full duplex, flow-control"). In the MTU drop-down menu, select "Custom," and then enter "9000" in the box below **(Figure 7)**.

4. When you've completed changing the settings for the port, click OK.

5. Repeat steps 2–4 for the other port, if necessary.

6. Back in the main Network window, click Apply after you've completed changing the settings.

7. If you do not need to combine Ethernet ports (link aggregation), your installation is complete. For additional information on combining Ethernet ports, open a browser and go to support.apple.com; type "network, Ethernet" and "Manage Virtual interfaces" to display various articles.

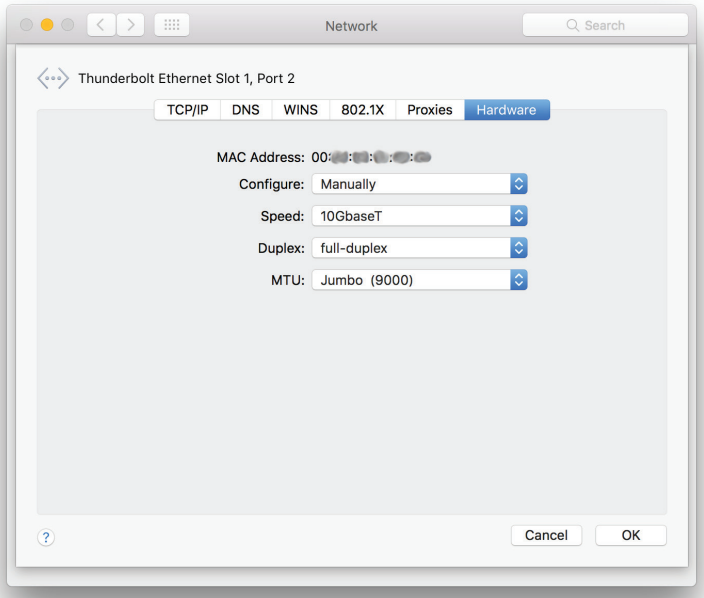

Figure 7

Chapter 5 – Verification and Configuration Steps

Basic Configuration Steps—Windows Users

Listed below are the basic steps necessary to configure the Twin10G T3E adapter for use with your computer.

1. With the Twin10G T3E adapter connected to your computer and 10GbE infrastructure, open the Network and Sharing Center control panel (**Figure 8**).

2. Set up network connections by clicking "Set up a new connection or network".

You may also configure the Sonnet adapter's settings using Windows Device Manager. You may locate the device's ports in the Network adapters category, listed as Intel Ethernet Controller X550 dual port network connections.

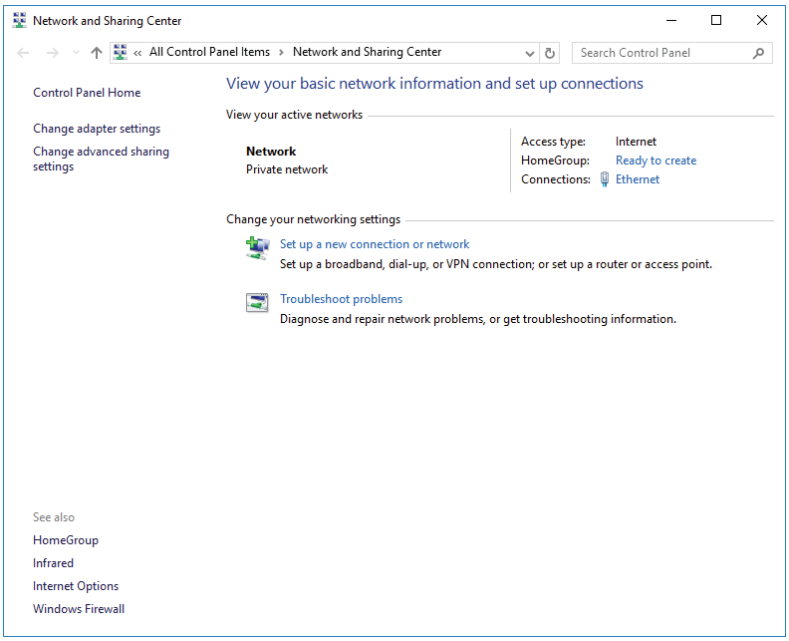

Figure 8

Chapter 6 – Tips, General Information, and Known Issues

TIPS, GENERAL INFORMATION

Keeping the Twin10G T3E Adapter Cool
With its optimized airflow design and automatic, temperature-controlled fan providing cooling at all times, the Sonnet adapter provides adequate cooling for the components inside. *Do not block the fan or any of the vents while the adapter is operating*! Otherwise, the adapter may overheat.

Hot-Plugging the Twin10G T3E Adapter
You may connect and disconnect the Thunderbolt cable between the Twin10G T3E adapter and your computer while your computer is on.

There's No Need to Unplug the Power Adapter
Because the Twin10G T3E adapter automatically powers on and off with the computer to which it's connected, there's no power switch, nor is there any need to disconnect the power cable under normal use. When your computer is sleeping, the Twin10G SFP+ enters a low-power state; this allows it to wake with your computer.

Power Indicator LED Operation
Because the Twin10G T3E adapter automatically powers on and off with the computer to which it's connected, its power indicator only lights when the computer is on, and turns off when the computer is sleeping or powered off. Note that the power adapter's power indicator remains lit as long as it is connected to a live power outlet.

Connecting Additional Thunderbolt 3 Peripheral Devices
The Twin10G T3E adapter includes two Thunderbolt 3 ports; the first connects it to your computer, while the second supports daisy-chaining of up to five additional Thunderbolt peripheral devices.

Twin10G T3E Can Provide Up to 15 Watts of Upstream Power
The Twin10G T3E adapter can provide up to 15 watts to bus-powered Thunderbolt 3 peripheral devices, enabling them to operate without connecting an additional power adapter.

How to Identify Thunderbolt 3 (40Gbps) Cables
Look for the Thunderbolt icon (ϟ) AND the number 3 on the connector housings to identify these cables. Cables with USB-C connectors that only have the Thunderbolt icon without the number 3 may only support 20Gbps speeds, and are not recommended for Thunderbolt devices with high bandwidth requirements. Cables marked with the USB icon (⇆) are NOT compatible for connecting the Twin10G adapter to the computer.

Using the Twin10G Adapter to Charge Your Notebook or Laptop Computer
Apple® MacBook Air® and MacBook Pro® computers with Thunderbolt 3 and some PC laptops with Thunderbolt 3 may be charged *slowly* via the Twin10G adapter's Thunderbolt 3 port, but some PC laptops will not accept charging from a Thunderbolt peripheral; see https://gtrusted.com/technology/thunderbolt/thunderbolt3-hosts/ for more information. Computers with Thunderbolt 2 or Thunderbolt ports may not be charged via Thunderbolt.

KNOWN ISSUES

Not All Computers' Thunderbolt 3 Performance is Equal
While this product features a 40Gbps Thunderbolt 3 interface, some computers equipped with Thunderbolt 3 use an implementation of Thunderbolt 3 that limits PCIe performance to 20Gbps. Mid-2017 and earlier 13-inch MacBook Pro computers with four Thunderbolt 3 ports have this limitation in the two right-hand Thunderbolt 3 ports, while offering full performance from the left-hand ports.

Not All Thunderbolt 3 Cables Deliver Full Performance
Full performance from the Twin10G adapter requires the use of the included Thunderbolt 3 (40Gbps) cable (which also supports up to 100W power delivery), or a comparable Thunderbolt 3 cable. When shopping for a Thunderbolt 3 cable, please be aware that some support only lower data transfer speeds (20Gbps).

Operating System (OS) Updates May Break Compatibility
Specific device drivers that work under one OS version may not work under a later version. Before updating your computer to the latest OS, we recommend that you check Sonnet's support pages to verify that the existing drivers work. Note that other software updates for the computer may also break compatibility.

Some Devices' Performance May be Affected by Where They Are Connected in a Thunderbolt Chain
However small, Thunderbolt introduces latency to a device chain. If you add additional Thunderbolt devices to the chain, you may need to experiment with positioning devices closer to or farther from the computer in the chain.

Chapter 7 – Warnings, FCC Compliance, and Support Information

Warnings

- Do not attempt to modify the enclosure. If this device appears to be malfunctioning, contact your reseller or local distributor.
- Do not expose the device to rain, use it near water or containers that contain liquids which might spill into any openings, or in damp or wet conditions.
- Do not drop the Twin10G T3E; dropping or mishandling the Sonnet adapter may result in a malfunction leaving the product inoperable.
- Follow the instructions in this manual carefully; contact your reseller or local distributor for additional advice not covered in this User's Guide.
- If unusual smells, sounds, or smoke come from the device, or if liquids enter it, switch it off immediately and unplug it from the electrical outlet.

FCC Compliance

Twin10G Thunderbolt 3 Edition complies with Part 15 of the FCC Rules. Operation is subject to the following two conditions: This device may not cause harmful interference, AND this device must accept any interference received, including interference that may cause undesired operation.

Contacting Customer Service

The Sonnet Web site located at www.sonnettech.com has the most current support information and technical updates. Before you call Customer Service, please check our Web site for the latest updates and online support files, and check this User's Guide for helpful information.

Email support requests generally receive the fastest responses, and are usually processed within a 24-hour period during normal business hours, excluding holidays. When you contact Customer Service, have the following information available so the customer service staff can better assist you:

- Product name
- Date and place of purchase
- Computer model
- Operating system version
- Software/firmware versions
- A System Report (macOS) or a Microsoft System Information MSINFO32 (Windows) report (Windows)

USA Customers

If further assistance is needed, please contact **Sonnet Customer Service** at:

E-mail: support@sonnettech.com

Tel: 1-949-472-2772

(Monday–Friday, 8 a.m.–4 p.m. Pacific Time)

For Customers Outside the USA

For support on this product, contact your reseller or local distributor.

Visit Our Web Site

For the most current product information and online support files, visit the Sonnet Web site at www.sonnettech.com/support/. Register your product online at https://registration.sonnettech.com to be informed of future upgrades and product releases.

SONNET™ ©2019 Sonnet Technologies, Inc. All rights reserved. Sonnet, the Sonnet logotype, and Twin10G are trademarks of Sonnet Technologies, Inc. Mac, the Mac logo, MacBook Air, MacBook Pro, and macOS are trademarks of Apple Inc., registered in the United States and other countries. Thunderbolt 3 and the Thunderbolt logo are trademarks of Intel Corporation in the U.S. and/or other countries. Other product names are trademarks of their respective owners. Product specifications subject to change without notice.
UG-TWIN10GC-TB3-E-I-062119