Termination

STEP 1:

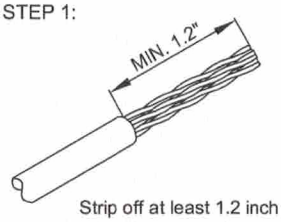

Strip off at least 1.2 inch of jacket from end of cable.

STEP 2:

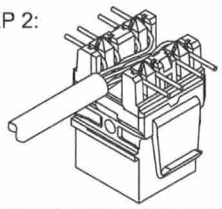

Press the wires through the projecting portion of terminals until fixed.

STEP 3:

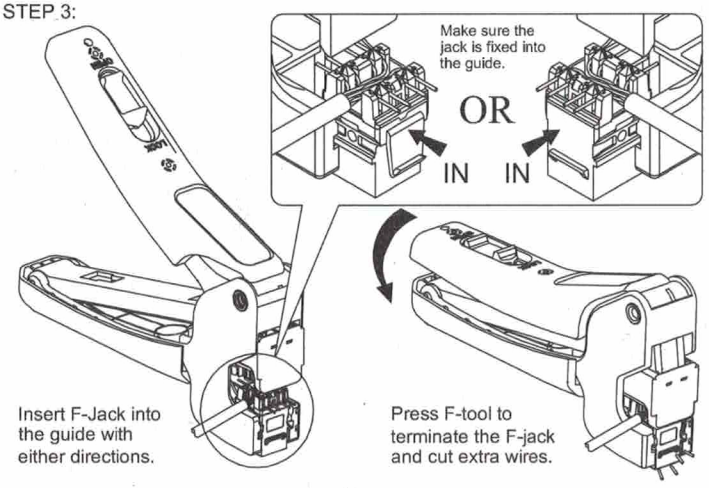

Insert F-Jack into the guide with either directions.

Press F-tool to terminate the F-jack and cut extra wires.

STEP 4:

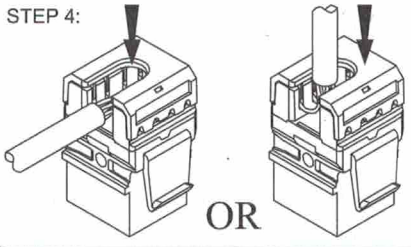

Place cap on F-Jack and press to make sure it is fully seated.
The cap opening allows the cable enters the jack from side or rear.

Cutting Module Assembly

Insert the new cutting module into the support portion.

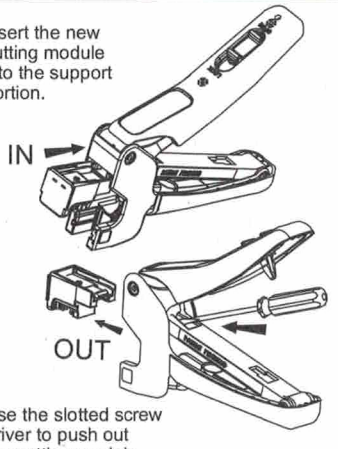

Use the slotted screw driver to push out the cutting module.

Handle Lock

USE:
Press the switch downward to open the handle.

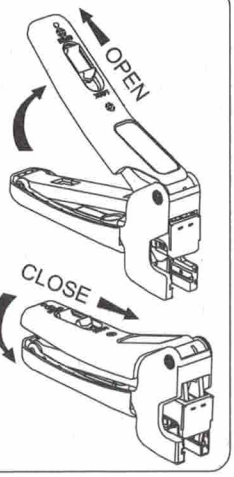

STORAGE:
Press the switch upward to lock the handle.